CAVITY PLUG
(M-type cavities)

Ordering Code:	**CP-X-Y-Z - ∗∗**

∗∗ Mfg. Code

Example:CP-20M-2H-00

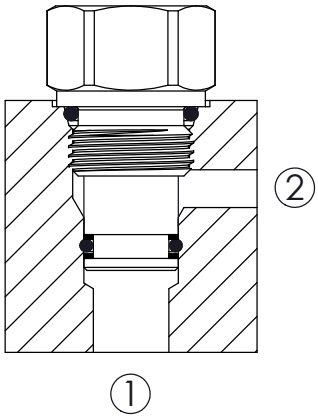

Example:CP-20M-2H-12

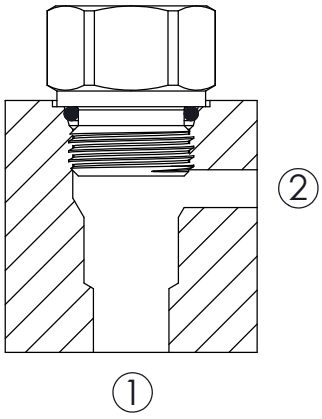

Illustrations / detail are for reference only. Data subject to change.

X	CAVITY-THREADS
20M	M20x1.5
22M	M22x1.5
28M	M28x1.5
42M	M42x2.0

Y	PORTS
2H	2 Holes

Z	OPERATIONS					
00	All Ports Blocked	20M	22M	28M	42M	
12	Ports ① and ② Open	20M	22M	28M	42M	