A-TYPE MANIFOLD FUNCTION

INTERNAL HEX. HEAD BOLT						
STAGES	1	2	3	4	5	6
LENGTH	50	100	150	200	250	300

TOP SUBPLATE MANIFOLD	
ORDER NO.	TYPE
W850502-Q1	TOP SUBPLATE MANIFOLD
NOTE:	THIS MANIFOLD MUST BE USED FROM 1 TO 6 STAGES

MODULAR SUBPLATE MANIFOLDS	
ORDER NO.	TYPE
W850501-Q	SERIAL CIRCUIT SUBPLATE MANIFOLDS
W850502-Q	PARALLEL CIRCUIT SUBPLATE MANIFOLDS
W850503-Q	SINGLE-ACTING CIRCUIT SUBPLATE MANIFOLDS
NOTE:	(THESE MANIFOLDS CANNOT BE USED WITHOUT "TOP SUBPLATE MANIFOLD")

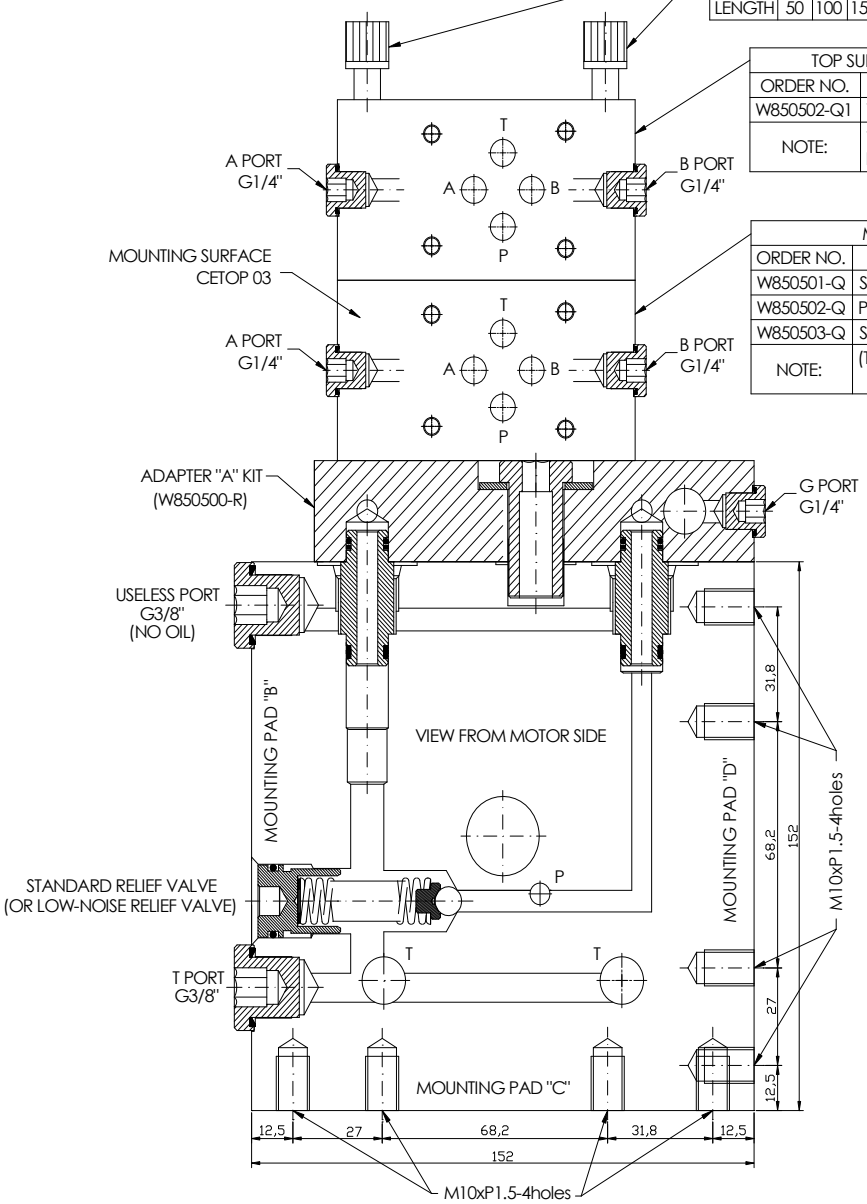

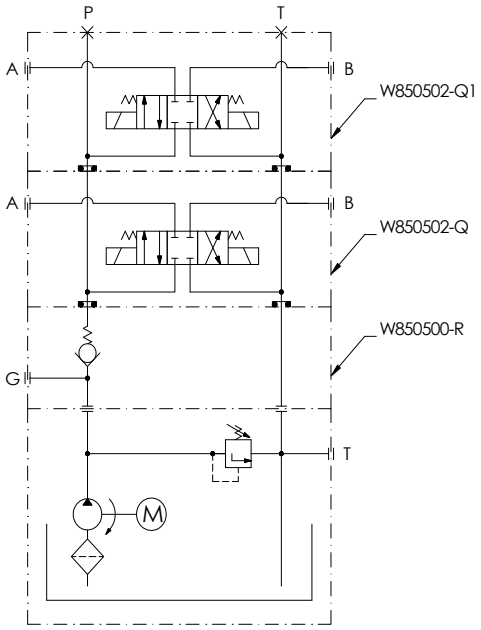

EXAMPLE : 2 STAGES PARALLEL CIRCUIT

WINNER industrial valves are sold separately and including manual and solenoid-operated four-way valves,along with acomplete range of accessory sandwich-type flow and pressure controls.
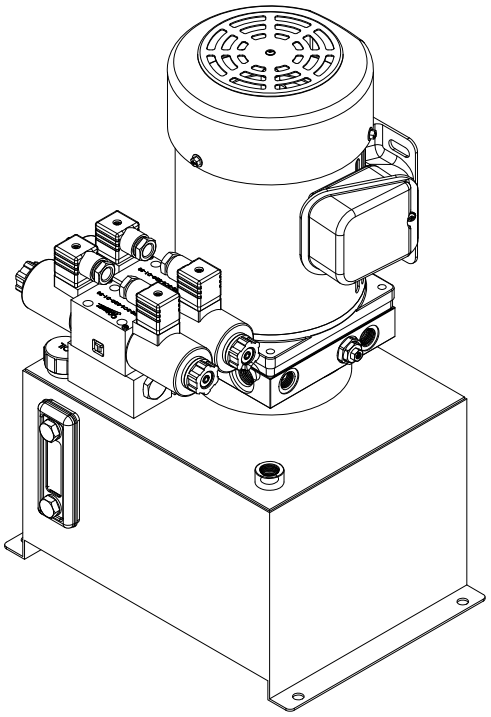
WINNER also manufactures custom manifolds with cartridge style valves for OEM applications. These integrated cartridge manifolds offer unsurpassed circuit flexibility and serviceability.